An Efficient Artificial Intelligence Maximum Power Point Tracker Based On Genetic Algorithm-Radial Basis Function

Albin Nshizirungu, George Irungu, Lawrence Letting

Abstract:_The amount of power produced by PV module is highly dependent on the environmental and weather conditions, such as solar irradiance, and ambient temperature. It is important to maximize the amount of power that a module produces in accordance with the weather conditions. One of the methods used to get as much production as possible from a PV module, is the maximum power point tracking that changes the electrical parameters of the PV. In this research a maximum power point algorithm based on hybrid Adaptive Genetic Algorithm Radial Basis Function (AGA-RBF) is proposed. The RBF which has a simple architecture and good learning algorithm, is first optimized by an adaptive Genetic Algorithm so that it operates with an optimal spread parameter. The resulting RBF neural network is used to determine module reference voltage and current corresponding to its input irradiance and temperature, such that the PV module production is maximum. The reference outputs from the RBF NN, are used together with the actual output voltage and current of the PV to generate a switching signal for the converter duty cycle control. A Matlab /Simulink model was developed for simulations and validation using data collected from a solar station. The simulation results by using both the proposed MPPT, and Perturb and Observe (P &O) as the MPPT used in most of the inverters, proved that the new method is more accurate, and produces more power.

Keywords: Adaptive Genetic Algorithm , Maximum power point tracker, Optimization, Radial Basis Function

1. INTRODUCTION

DISTRIBUTED Generations Technologies (DGs) are making good progress in today's energy industry. Solar for both heat and electricity production is one of the most preferred generations, due to its availability almost all over the world. However taking advantage of the free energy that the Sun offers remains an issue. Solar cell efficiency in converting photons of light into electrical energy is very low and generated power is characterized by frequent fluctuations as it depends on environmental factors such as sunlight, temperature etc. One of the solutions to this drawback is maximum power point tracking that helps to extract maximum power possible from a PV module[1]. A number of methods have been developed and implemented by researchers for MPPT. These methods include; the Constant Voltage (CV), Short Current Pulse (SCP), Open Circuit Voltage (OCV), Perturb and Observe (P&O), Incremental Conductance (IC), and Hill Climbing[2],[4]. The Perturb and Observe and the incremental conductance are the most used techniques, due to two factors namely their cost effectiveness, and their easy implementation. However their performance in tracking maximum power point have some limitations especially in cases of rapid change in irradiance and temperature levels.

In this case the response of a system using the Perturb and Observe for instance is slow and even if the MPP is reached it will continue to oscillate about it[3],[5]. Incremental Conductance method was tried as an update to the P&O algorithm, but its precision is of low reliability, the biggest drawback is the stability of maximum power point. [3],[6],[7].To solve the problem recent researches, used artificial intelligence algorithms such as; Fuzzy logic controller and Artificial Neural Network (ANN) methods[8],[11]. MultiLayer Perceptron(MLP) and Radial Basis Function (RBF) networks were combined with optimization methods for nonlinearity and self-adaptability improvement [12],[14]. Multilayer perception together with Levenberg-Marquardt method was used and gave good results [15]. In this research we propose an Adaptive Genetic Algorithm-RBF method for MPPT. The use of RBF will provide an upgrade to MLP due to its training speed, which is practically higher than that of an MLP. The role of the Adaptive Genetic algorithm is to optimize the performance of the RBF by searching for the best spread for the radial basis function. The final optimized RBF NN is used to control the converter duty cycle. This paper has different sections as follows: PV details system, and mathematical model are provided in Section II. In Section III the P&O as MPPT method used at solar station is described. Section IV provides details about how to implement the AGA and Radial Basis Function, in Section V the results are presented and discussed, then a conclusion is provided in Section VI.

- *Albin Nshizirungu is currently pursuing masters degree program in electric power systems engineering in Pan African University, Kenya, PH-0716871065. E-mail: albinkay@gmail.com*
- *George Irung is currently a lecturer in electric power and electronics engineering in Jomo Kenyatta University of Agriculture and Technology Kenya, E-mail: girungu@jkuat.ac.ke*
- *Lawrence Letting is currently a lecturer in electrical and communications engineering, in Moi University, Kenya, Email: LettinLK@gmail.com*

2. PV MATHEMATICAL MODEL

Fig. 1 illustrates the equivalent-circuit for one PV cell. Basically it consists of a current source, a diode in parallel, a shunt resistance, and a series resistance. The series connection is preferred in case an increased voltage is needed, whereas parallel combination of cells increases the PV current[16],[17].

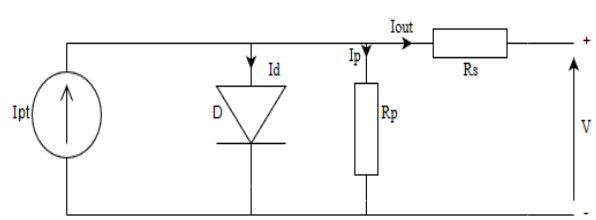

***Fig. 1** The equivalent-circuit for one PV cell[16].*

The cell output current I may be calculated by (1) as following:

$$I_{out} = I_{PT} - I_{nom}\left[\exp\left(\frac{V_S+R_SI}{V_Tn}\right) - 1\right] - \frac{V_S+R_SI}{R_P} \qquad (1)$$

with:

$$V_T = \frac{N_S k T_{ref}}{q} \qquad \text{and,}$$

$$I_{rs} = I_{nom}\left(\frac{T_k}{T_{ref}}\right)^3 \exp\left[\frac{q*E_g}{n*k}\left(\frac{1}{T_k} - \frac{1}{T_{ref}}\right)\right] \qquad (2)$$

where, Iout is the PV output current, VS is the PV terminal voltage, IPT is the PV photocurrent, ID is the current through the diode, Ip is the current through Rp, Irs is reverse saturation current of the diode, n is the ideality factor, Rs is the series resistance, and Rp is the parallel resistance. VT is the thermal voltage, q is the charge of an electron, k is the Boltzmann constant, TK is the cell temperature in Kelvin. Eg is the energy band gap, Inom is the nominal saturation current. T is the cell temperature in Celsius, TRef is cell reference temperature at standard conditions.

3. MODIFIED PERTURB AND OBSERVE MPPT

This method consists of performing perturbation in the PV output voltage then observing the impact it has on the generated power compared to the last value[1],[2],[18]. The direction of the next perturbation is determined by the impact that the previous perturbation had on the power. If the last perturbation increases power then the next perturbation is kept in the same direction, if the power is decreased the next perturbation goes in the opposite direction. The perturbations are done in a number of iterations till the maximum power point is reached. The MPP is reached when the power increment with respect to the increment in PV output voltage is zero. The flow chart of the perturb and observe algorithm is shown in Fig. 2[1],[2].

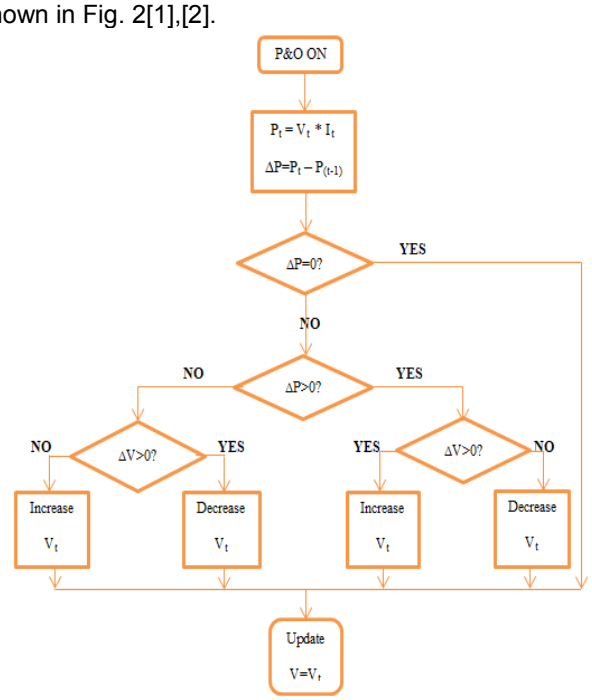

Fig. 2 *The flow chart of the Perturb and Observe algorithm[2].*

4. THE PROPOSED MPPT METHOD

4.1. Adaptive GA Technique

Genetic Algorithm is in the group of evolutionary methods that was inspired by biological genetic processes such as crossover, and mutation to find solutions to search problems. It consists of considering a number of solutions as chromosomes, then calculate their respective fitness as in (3). The best fit solutions will be selected for crossover and mutation while the bad fit solutions are dropped. Both operations consist of changing the chromosomes genetic characteristics, with a certain probability aiming to produce new and better fit chromosomes. The process is repeated for a number of generations of chromosomes till the best fit of all generations converges to one value[19],[20].

$$fitness = \frac{1}{MSE+1} \qquad (3)$$

The algorithm is made adaptive by adding a process to determine the number of individuals to be replaced by new ones which accelerates the training process. First a value Val is calculated by (4), to check whether the population is diverse enough or not[21]. The diversity is achieved when Val is equal to one, in this case valold is less than valnew, then updated:

$$Val = \left(\frac{val_{new}}{val_{old}}\right)^2 \qquad (4)$$

where valnew, and valold, the degree of diversity for the current and previous iterations, which are calculated by comparing the maximum fitness to the population average fitness. Thus the number Nrep of the individuals to be replaced is calculated using (5). The selection of the solutions to be replaced is done by roulette-wheel based on the bad fit individuals:

$$N_{rep} = N * (0.35 + p^{val} * 0.6) \qquad (5)$$

where N the number of chromosomes in a generation, p is any number between 0 and 1. In addition a characteristic value vc is calculated for each solution through which the solutions that will participate in crossover are determined. The characteristic value is calculated using (6):

$$v_c = (f - f_w) * (2val - 1) - (f_{top} - f_w) * (val - 1) \qquad (6)$$

where f is the fitness of the solution, ftop the maximum fitness, and fw the worst fitness for the generation. Roulette-wheel is again used to choose solutions for crossover, this time depending on the best characteristic value. Another technique is used to change the number of mutations (mut-num) for each generation of chromosomes, which is given by (7):

$$mut - num = 2N * \frac{val_{old} - val_{new}}{val_{old}} \qquad (7)$$

The above techniques help to choose only the better solutions for a generation which accelerates the convergence, and can easily track the global optimum[21].

4.2. Adaptive GA-RBF MPPT

The use of neural networks for nonlinear approximation has been a great achievement in modern technology. The RBF neural network has advantages compared to other feed forward neural networks like MLP; it has a simple structure, and a better training time[22,23].

RBF neural network consists of three layers; input layer, a hidden layer, and an output layer[22,23]. In this research the RBF neural network is used for maximum power point tracking purpose. The RBF used in this research uses Gaussian given in (8), as hidden neurons activation function, and the RBF output may be determined by (9):

$$\theta(d) = exp\left(\frac{d}{2s^2}\right) \quad (8)$$

with, d=|| Xi – Pj||
s_j : is the RBF width or spread

$$f(X) = \sum W_j\, \theta\big(|| Xi - Pj ||\big) + W_o \quad (9)$$

j=l:m, i=1,2….,k: number of RBF
where Wj are the weights, Xi and Pj are the inputs and centers of RBFs respectively, and Wo is the bias.

Matlab/Simulink library provides a way of creating a neural network block, that may be used while building a model. However, the RBF NN that we get through simulink guidance, uses a default spread parameter of one which may sometimes compromise the training performance. Choosing the radial basis function's spread parameter is crucial for the performance an RBF neural network because both too large and to small values of it are not good. The adaptive GA as a searching algorithm was used to determine an optimum value of the spread parameter. The RBF neural network is trained by 1000 arbitrary selected environmental data to check for fitness. The role of genetic algorithm is to optimize the RBF neural network by searching for optimum value of spread that gives minimum MSE after training the network[24]. The choice of spread by a searching algorithm has reduced the training errors considerably, therefore making the neural network suitable for maximum power point tracking. Once optimized the RBF neural network block was used in Simulink model as a controller for maximum power point by changing the converter duty cycle. The RBF NN controller receives irradiance, and temperature as inputs then calculate the corresponding voltage and current, that yield maximum power.
The following step by step procedure explains more the way the AGA-RBF MPPT algorithm works:

Step 1. Initialize the RBF neural network with random parameters, use K-mean clustering to get the spread of the radial basis function, from a predefined interval range.

Step 2. Define the Genetic algorithm parameters, these include; generation size, crossover rate, mutation rate, number of centers, selection criteria, mean square target error, and maximum number of generation.
Step 3. Choose randomly the initial population with size N.
Step 4. Feed the initial RBF NN with sample training data, and check for the performance by calculating the mean square error.

Step 5. Calculate the fitness of each chromosome (spread) whenever it is used in the network.

Step 6. Choose the best fitness value, among all the calculated chromosome fitness values in a generation, and check if the corresponding MSE is less than the minimum permissible MSE. If yes pass to step 9, if no continue with step 7.

Step 7. Calculate the number Nrep of chromosomes to be replaced in crossover, and choose the remaining best fit to be part of the next generation.
Step 8. Among the Nrep chromosomes select randomly a pair of chromosomes to mate in crossover, and produce new chromosomes. The crossover is done till the number of the new generation, is equal to initial population size.
Step 9. Convert all the chromosomes real number values into binary system, then calculate the number of bits affected by the mutation operator for each chromosome. Perform mutation of the chromosomes in the new generation to finalize the creation of a different new generation. Go back to step 4 to check for performance.
Step10. Repeat the procedure till we get the best optimized network. Stop the optimization.

A block diagram of the proposed grid connected array with the MPPT controller is shown in Figure 3, where Vpv represents PV output voltage, Ipv PV current, and D the duty cycle. The flow chart of the AGA-RBF algorithm is shown Figure 4.

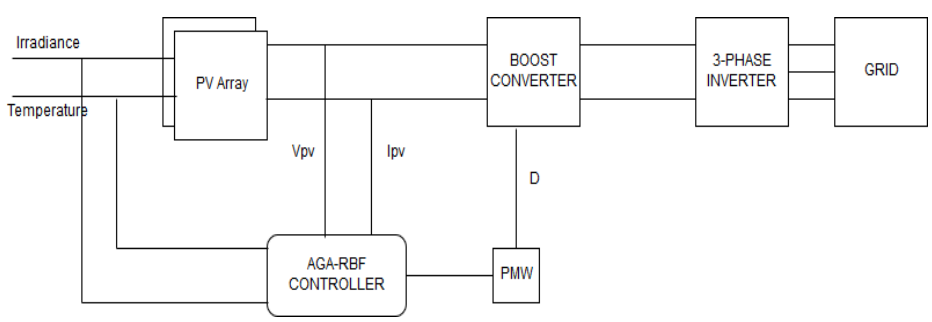

Fig. 3 *Block diagram of the proposed grid connected array with the MPPT controller.*

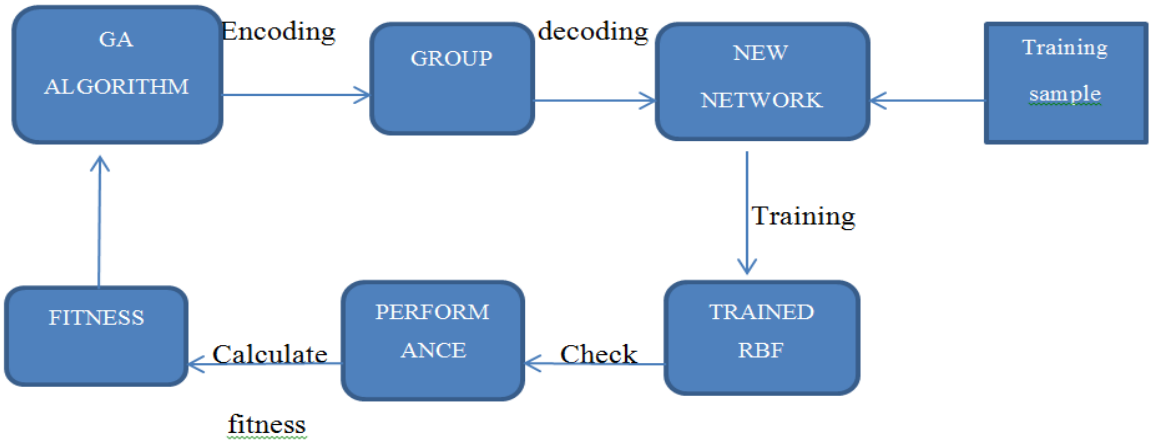

Fig. 4 *AGA-RBF Algorithm flow chart*

5. SIMULATION AND RESULTS DISCUSSION

A grid connected PV array system was modeled using Matlab/Simulink. The Simulink model comprises of a 100kw SolarWorld SW250 Poly array, and a load of 100kw is included to get the simulation results as illustrated in Fig. 5. An inverter control system to keep the inverter output signals consistent with respect to the grid is also included. In Fig. 6 details about the MPPT duty cycle controller based on AGA-RBF are shown. The inputs to the model are the environmental conditions namely irradiance, and temperature collected from a solar station in Rwanda. Training the RBF NN by the Adaptive GA has considerably reduced the root mean square error as it is shown in Fig. 7. To evaluate the proposed AGA-RBF MPPT, the Perturb and Observe (P&O) MPPT which is used by manufacturers of the SMA inverter used at the station, was used to control the same model, then the results were compared. The simulation results using different values of irradiance, and temperature proved that the proposed method has many advantages. Table 1 illustrates the power transferred to the load by the two MPPT methods, when used as controller in the model. The results from seven different environmental inputs show that AGA-RBF yield more power compared to the data from the station that uses, P&O algorithm as maximum power point controller. A comparison provided in Fig. 8 shows that when the new algorithm was used the simulations give a total power of 345.23 kw, against 330.88 kw that were produced by the array at the station. An important increase of 14.35 kw on the total power produced by the array was registered. Referring to the signals shown in Fig. 9, we can see that the maximum power point tracking using AGA-RBF algorithm is more accurate as the resultant power signal has less oscillations when maximum power is reached. The power signal resulting from maximum power tracking by P&O, after the change in irradiance shows that the exact maximum power is not reached, as the values continue to vary about the maximum power. The MPPT using AGA-RBF took shorter time to track the maximum power point than the P&O, when the input data were suddenly changed from 900w/m2 to 300w/m2. As shown in Fig. 10 time taken by AGA-RBF to track the maximum power point after the rapid change in irradiance is about 0.1s, which is relatively less than 0.18s used by the P&O for the same purpose. This is a reduction of the response time to almost a half, which is a significant for practical point of view. Fig. 10 also shows that the AGA-RBF maximum power point tracker is better in predicting the maximum power. If we look at the values of power predicted by the two algorithms, AGA-RBF MPPT yield 28.6 kw when the irradiance is 300 w/m2, and the P&O algorithm produced 27.9 kw.

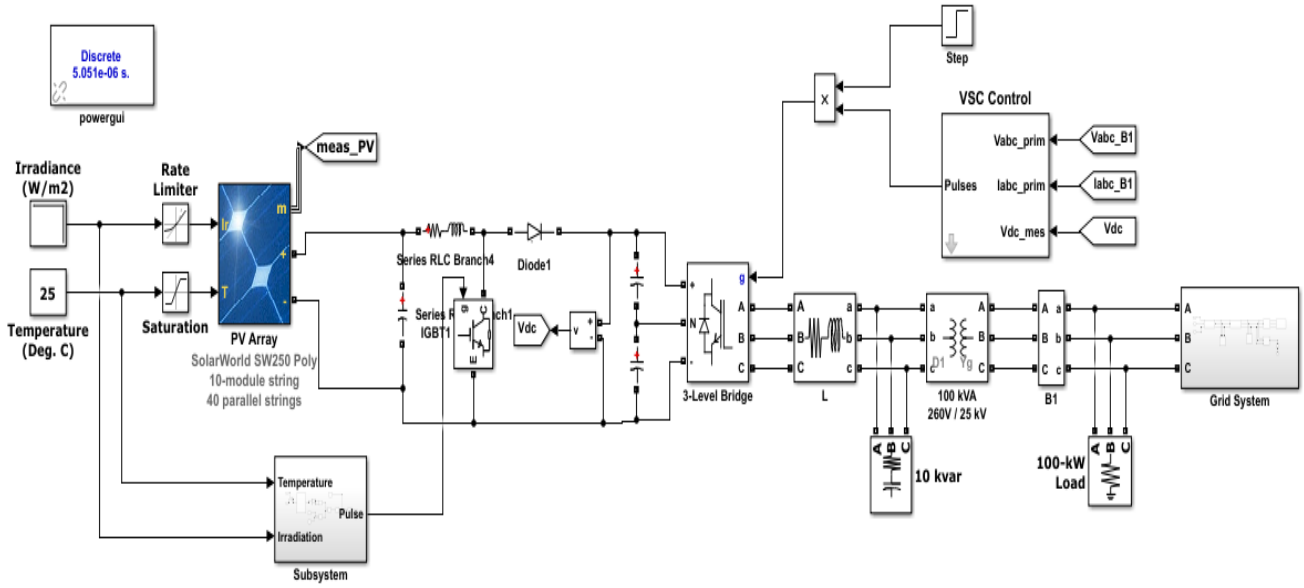

Fig. 5 *Simulink model of the proposed MPPT*

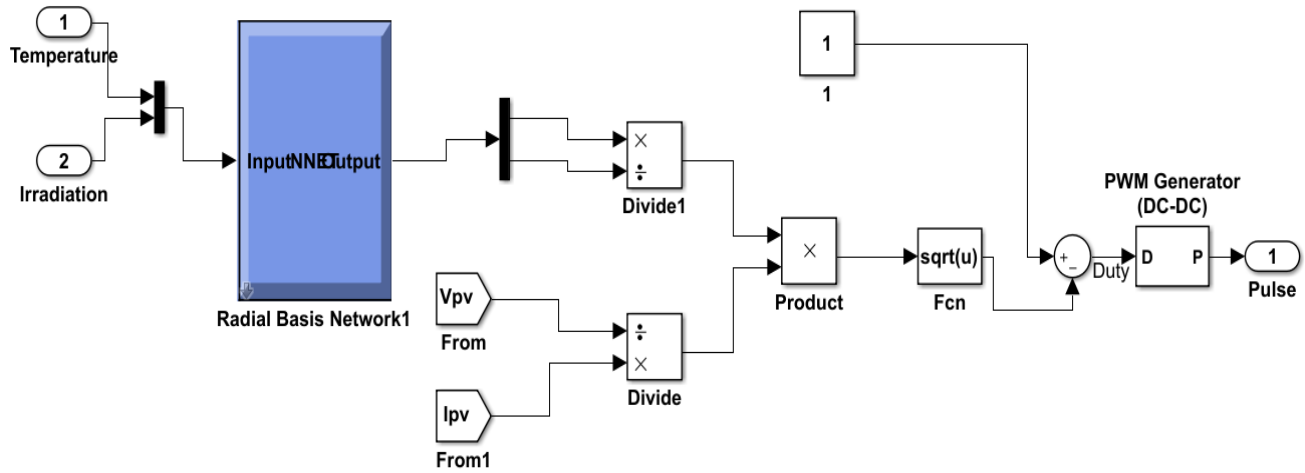

Fig. 6 *Adaptive GA-RBF Duty cycle controller.*

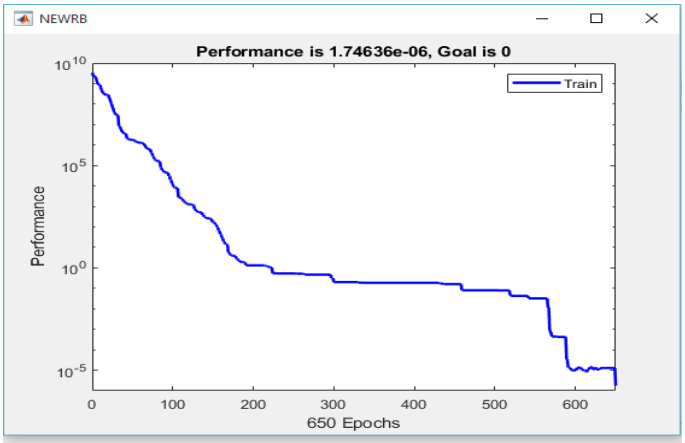

Figure 7. *Plot of AGA-RBF training performance.*

As it can be seen in Fig. 7 training RBF by AGA reduces the MSE. The goal for the reduction of the MSE errors was set at 0, and we managed to achieve a reduction up to 1.7 e-6 with 16 neurons in the hidden layer of the RBF neural network. The results were reached after 650 iterations, and the maximum number of generations was set at 20. From the results in Table 1 a comparison on how efficient are the two MPPT, methods in extracting power from the array, was elaborated in Fig. 8. Efficiency of an MPPT in extracting the possible power that the array can produce, is calculated using (4.1). An efficiency of 98.8% was achieved for AGA-RBF MPPT, against 94.7% for the plant's P&O, which means that 98.8% of the total power that the array can produce is transferred to the load, when AGA-RBF MPPT is used.

$$\eta_{mppt} = \frac{P_{OUT}}{P_{PV}} \quad (10)$$

Where, P_{OUT}, is the actual power output extracted by the AGA-RBF MPPT, and P_{PV} is the possible power the array can produce for the given values of the irradiance, and temperature. So the efficiency of the maximum power controller is given by:

$$\eta_{mppt} = \frac{345.23}{349.25} = 0.988 * 100 = 98.8\%$$

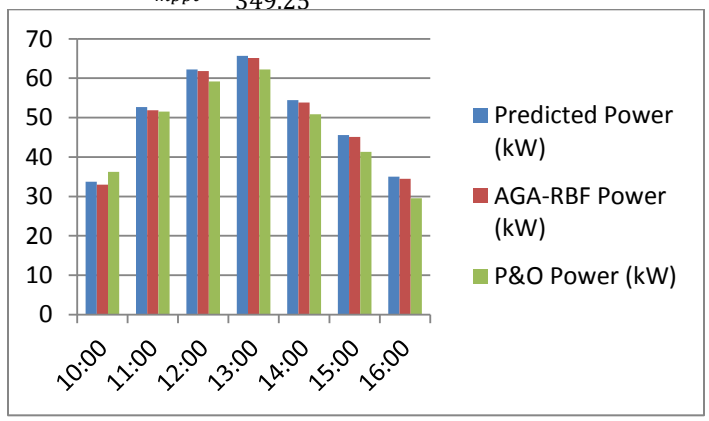

Fig. 8 *Accuracy in power extraction from the module*

TABLE 1. COMPARISON OF POWER PRODUCED WITH AGA-RBF AND P&O

Module temperature (°C)	Insolation (W/m^2)	Predicted Power (kW)	AGA-RBF Power (kW)	P&O Power (kW)
33.48	353.82	33.75	32.96	36.26
40.31	602.78	52.66	51.88	51.52
48.42	780.06	62.19	61.79	59.18
51.44	855.7	65.65	65.16	62.2
53.27	720.04	54.42	53.85	50.84
50.91	585.32	45.57	45.12	41.32
47.46	435.08	35.01	34.47	29.56
TOTAL		349.25	345.23	330.88

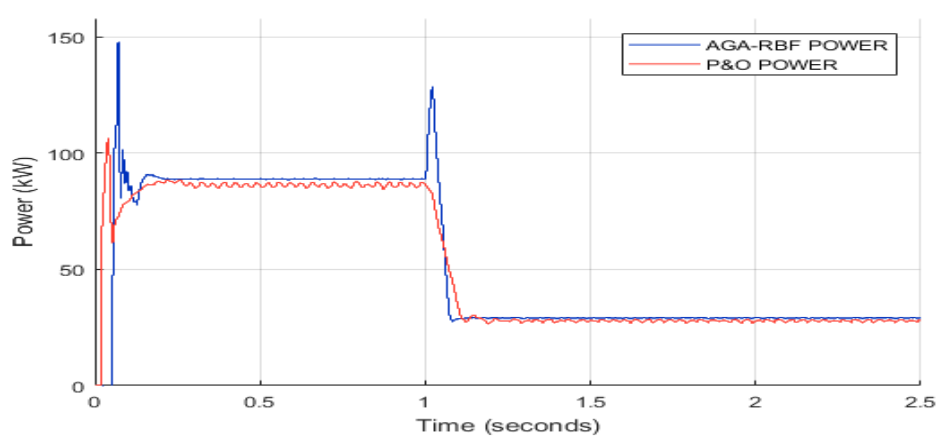

Fig. 9 *A comparative plot for the accuracy of AGA-RBF, and the P&O MPPT Algorithms*

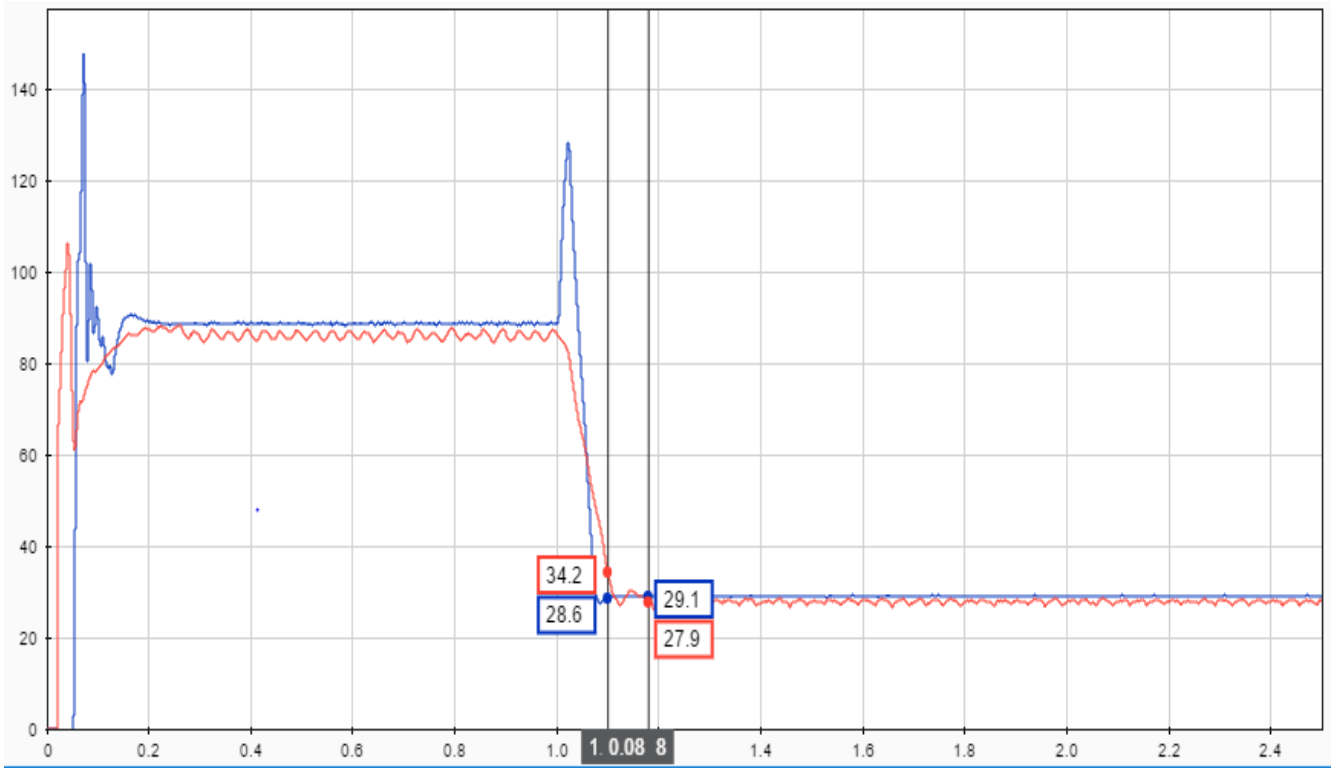

Fig. 10 *A comparative plot for the responses of the AGA-RBF, and the P&O Algorithm*

6. CONCLUSION

In this research a new MPPT algorithm based on Adaptive GA-RBF was developed. A C++ programming code was written and a Matlab/Simulink model was developed then simulations results discussed. The model was controlled by both AGA-RBF and P&O maximum power point tracking techniques, for the evaluation of the former. After simulations the results show that the MPPT using AGA-RBF took 0.1s to track maximum power point when irradiance is subjected to rapid change which less than 0.18s taken by the P&O. The new MPPT method also produced more stable results unlike the P&O whose signal have higher ripples. For different values of irradiance, and temperature collected from Rwamagana solar station then, used on the model the mppt controller based on AGA-RBF produced 14.35 kw more power than the station. The comparison was done assuming that all the PVs at the station were working properly, at the time of the data collection. In general the fact that using adaptive GA, to optimize RBF neural network reduced considerably the mse, this made the new method more robust in tracking the maximum power point. However this method that uses hybrid artificial intelligence methods, looks more complex than P&O that can be easily implemented with digital and analogue circuit. The new method also has a higher overshoot, when there is change in inputs.

ACKNOWLEDGMENT

The authors thank the staff of PAUSTI especially those of Electrical Engineering department, the African Union. This work was financially supported by the African Union/ PAN AFRICAN UNIVERSITY, and JAICA.

REFERENCES

[1] P. R. Krishanan, S. Joseph, K. K. A. Kumar, and A. Kumar, “Generalized maximum power point tracker,” Proc. IEEE Annu. Int. Conf. Emerg. Res. Areas, AICERA Int. Conf. Microelectron. Commun. Renew. Energy, ICMiCR, Kanjirapally, India, 2013

[2] Y. Emre, K. Vardar, and M. Ali, “Investigation of MPPT Methods Used In PV Systems,” IOSR J. Electr. Electron. Eng., vol. 13, no. April, pp. 84–95, 2018.

[3] M. and P. Babaa, S.E. Armstrong, “Overview of Maximum Power Point Tracking Control Methods for PV Systems,” J. Power Energy Eng., vol. 2, pp. 59–72, 2014.

[4] S. Shi, Y. Wang, and P. Jin, “Study On Maximum Power Point Tracking For Photovoltaic Power Generation System,” Proc. IEEE Chinese Automation Congress, Changsha, China, 2013

[5] R. Anand and D. S. Saravanan, “A Correlative Study of Perturb and Observe Technique and GA-RBF-NN Method Supplying a Brushless DC Motor,” Circuits Syst., vol. 07, no. 08, pp. 1653–1664, 2016.

[6] Y. Zou, Y. Yu, Y. Zhang, and J. Lu, “MPPT Control for PV Generation System Based on an Improved Inccond Algorithm,” Procedia Eng. Work. Inf. Electron. Eng., vol. 29, pp. 105–109, 2012.

[7] Z. B. . Elgendy MA , Atkinson DJ, “Experimental investigation of the incremental conductance maximum power point tracking algorithm at high perturbation rates.,” IET Renew. Power Gener., vol. 10, no. 2, pp. 0–20, 2015.

[8] M. Lini, and M. J. Khan, “Artificial intelligence based maximum power point tracking algorithm for photo-voltaic system under variable environmental conditions,” Proc. IEEE Conference on recent development in control, automation and power engineering, Noida, India, 2017.

[9] E. M. Natsheh and A. Albarbar, “Hybrid Power Systems Energy Controller Based on Neural Network and Fuzzy Logic,” sim. Grid & ren. En (sgre), vol. 4, no. May, pp. 187–197, 2013.

[10] E. Saloux and A. Teyssedou, "Explicit model of photovoltaic panels to determine voltages and currents at the maximum power point," Sol. ENERGY, vol. 85, pp. 713–722, 2011.
[11] A. Reza, M. Hassan, and S. Jamasb, "Classification and comparison of maximum power point tracking techniques for photovoltaic system : A review," Renew. Sustain. Energy Rev., vol. 19, pp. 433–443, 2013.
[12] T. Kurban, and E. Beşdok, "A comparison of RBF neural network training algorithms for inertial sensor based terrain classification," Sensors, vol. 9, no. 8, pp. 6312–6329, 2009.
[13] M. A. Enany, "Cuckoo search – based maximum power point tracking controller for PV water pumping system," J. Renew. Sustain. ENERGY, vol. 9, no. 6, 2017.
[14] R. Anand and D. S. Saravanan, "A Correlative Study of Perturb and Observe Technique and GA-RBF-NN Method Supplying a Brushless DC Motor," Circuits Syst., vol. 07, no. 08, pp. 1653–1664, 2016.
[15] F. Ndiaye, M. Sene, M. Beye, and A. S. H. Maiga, "Effects of climatic conditions on a polycrystalline photovoltaic module in Niger," Int. Lett. Chem. physics, Astron., vol. 55, no. V, pp. 59–65, 2015.
[16] N. Pandiarajan, and R. Muthu, "Mathematical Modeling of Photovoltaic Module with Simulink," Proc. IEEE 1st International Conference on Electrical Energy Systems, Newport Beach, Calfornia, February 2011.
[17] H. Bellia, "A detailed modeling of photovoltaic module using MATLAB," NRIAG J. Astron. Geophys., vol. 3, no. 1, pp. 53–61, 2014.
[18] R. A. Cullen, "What is Maximum Power Point Tracking (MPPT) and How Does it Work?," Blue Sky Energy, vol. 1, pp. 1–2, 2010.
[19] D. Beasley, D. R. Bull, and R. R. Martin, "An Overview of Genetic Algorithms," Univ. Comput., vol. 15, no. 2, pp. 58–69, 1993.
[20] C. Jenna, "An Introduction to Genetic Algorithms," www.semanticscholar.org, 2014.
[21] D. Jakobović, and M. Golub, "Adaptive Genetic Algorithm," Journal of Computing and Information Technology, vol. 7, no. 3. pp. 229–235, 1999.
[22] R. B. Santos, M. Rupp, S. J. Bonzi, A. Maria, and F. Fileti, "Comparison Between Multilayer Feedforward Neural Networks and a Radial Basis Function Network to Detect and Locate Leaks in Pipelines Transporting Gas," Chem. Eng. Trans., vol. 32, pp. 1375–1380, 2013.
[23] M. Jiang, W. Zhan, and H. Yifan, "A Comparison between the BP and RBF Networks," Proc. IEEE 8th international conference on signal processing, Beijing, China, November 16-20, 2006.