Iot Based Smart Street Lights Empowered By Piezoelectric Sensors

Shahbaz Ahmad, Ayesha Siddique, Kashiq Iqbal, Aamir Hussain, Amir Ijaz

Abstract: In last few decades, the need for electricity is increased exponentially and directly effects upon the economy of countries. Developing countries are facing load shedding issues. The natural ways of producing electricity are decreasing day by day. There is need of natural resources to produce and fulfill the needs of electricity. Currently, the solar panels are widely used for producing electricity from sunlight. But the main hurdle in the implementation of solar panel is that they need to fit in open spaces where the light of sun directly falls on it. World moving towards automation and various sensors available to sense and automate the daily life processes. Piezoelectric sensors are special type of sensors that produce energy by pressure, force or load. Smart cities and societies are key components of automation and main area of research. Street lights are essential part of smart streets. We have proposed an IoT based scheme for street light automation that uses the electricity produced from piezoelectric sensors. It will bring redemption from traditional electricity needs that lead to minimizing the load shedding.

Index Terms: Internet of Things, Smart Lights, Street Lights Automation, Smart Society, Piezoelectric Sensors, LDR

1 Introduction

There have been a limited number of streets in smart societies and over the past few decades, street lamps and regulation of management is relatively easy. But as the world has grown into a well-off community and with urbanization, the number of smart societies in modern cities has risen rapidly [1]. So it became an issue to regulate and maintain street lights for smart societies and cities. It is also regarded as the first generation of the original street light control, which is inefficient and a waste of manpower. At present, street lamps control much of the urban only by manual control, a control switch placed in each of the street lamps. There is a large amount of electrical energy lost [2]. Street lights have group-based control in this traditional framework, which suggests that individual lights cannot be controlled. Because of certain natural disasters, such as floods, the whole system is disrupted if there is a wire breakage. To fix, maintenance costs would be high for the method. They often make use of a negative sodium vapor lamp. 33,000 lumens are provided by the low-pressure sodium vapor lamp, requiring more energy.The street light control system has been automated in recent years [3]. One such system is to adjust the resistance by using a light-sensitive device to control street lamps that automatically turn on after dark in the evening and automatically turn off in the morning. While it decreases the power of man, it does not maintain the energy expended during the night. It also revealed a concern that it cannot fulfill the needs of the rising street lamp data and smart management. In short, the new street lighting approach is required which will be simplistic and blunt. Therefore, there is need to build a highly intelligent framework for street lighting. The LDR (Light Dependent Resistor) is used for day-night sensing [4]. The kind of sensor we use here is a piezoelectric sensor. A piezoelectric sensor is a device that uses the piezoelectric effect by converting it to an electrical charge to calculate changes in pressure, acceleration, temperature, strain, or force [5], [6]. The piezoelectric sensor is used for vibration sensing here. With proper covering layers, these sensors are buried beneath the lane. In a uniform sequence, they are distributed over footpaths. The sensor detects the vibrations generated by the vehicle or the person's movement and sends the corresponding electrical signal to the microcontroller. The microcontroller adjusts the street lights' brightness accordingly. The Arduino UNO microcontroller is used with the aid of the ZigBee protocol, the sensor data are collected from previous lamps and essential calculations are carried out, such as speed and others. This system can be extended to heavy-duty roads for monitoring purposes. At the same time, concerning energy saving, it also proves to be beneficial for a small lane. Now, in all sectors of the economy, energy is a critical need for human life and growth. Electricity generation is also achieved by entirely different types of methods [7]. The main objective of this project is to generate electricity through piezo transducers using a non-conventional system. Electricity shortages have been the biggest problem facing the government in recent days. The reduced use of power is the only solution to this problem. According to this paper, we should minimize power wastage. Whenever the

- *Shahbaz Ahmad completed his MCS from Islamia University Bahawalpur in 2013 and MSCS from National College of Business Administration & Economics, Sub Campus Bahawalpur in 2018. Currently, he is working as a researcher. His research interest includes Information Security, Network Security, Internet of things and Wireless Sensor Networks.*
  E-mail: shahbaz4426@gmail.com
- *Ayesha Saddique received her MS Computer Science degree from University of Agriculture, Faisalabad, Pakistan. She is currently working as a lecturer with Department of Computer Science, United School and Colleges Faisalabad. Her research interest in Networks, Cloud Computing, Big Data and Artificial intelligence.*
  E-mail: ashiayesha1287@gmail.com
- *Kashif Iqbal receives BS Hons degree in Computer Science from Islamia University of Bahawalpur, Pakistan and currently studying MS degree in Computer Science from MNS University of Agriculture Multan, Pakistan. His research interests include Internet of Things, Digital Image Processing, Deep Learning and Wireless Sensor Networks.*
  Email: kashifiqbal23@gmail.com
- *Aamir Hussain received the Ph.D. degree in computer science and technology from the School of Computer Science and Technology, Wuhan University of Technology, China, in 2016. He is currently an Assistant Professor with the Department of Computer Science, MNS University of Agriculture Multan, Pakistan. His research interests include Wireless Sensor Networks, Internet of Things, and Software-Defined Networks (SDN).*
  Email: aamir.hussain@mnsuam.edu.pk
- *Amir Ijaz received his BEng (Hons) Electronic Engineering degree from Manchester, United Kingdom and his MS Electrical Engineering degree from Islamabad, Pakistan. He is currently based in the department of Computer Engineering at the HITEC University, Taxila, Pakistan. He has published in leading international journals and national venues. His research interests include but are not limited to Communication Engineering, Electronic Systems, Next Generation Networks, Wireless Sensors and the Internet of Everything/Things (IoE/T).*
  E-mail: amirijaz@live.com

engine a significant amount of potential energy is lost due to friction as it passes over the path. We can switch out electricity in this project by exploiting piezo electrical results, once the peoples pass on footpaths. Pressure is applied on footpath, by exploiting piezo electrical result we can convert the mechanical energy to a voltage by using a rechargeable battery and we can store the energy in the battery. The lights in the streets shine continuously during the night. The unwanted use of electricity consumes a huge amount of energy. The execution of this project reduces this wastage of electricity. We can sense the movement of the vehicle by using the ultrasonic sensors and we can light street lights based on that movement by using microcontroller programming.

2 Literature Review

Streetlights are one of the most important factor to make the city smarter. The purpose of streetlight is to provide light at night to avoid various accidents and criminal attacks. To attain the intelligent street light system many ideas were proposed. So one of the best idea proposed by the author was the energy efficient street lightening system. This system consists of Ethernet-based communication interface, module of Led lamp and a multi-phase digital control driving system for led lamps. The aim of digital-controller is to collect the data from the Ethernet and perform the functions in the lamp module whereas the Ethernet is connected with the computer. The public streetlights management system is usually made up of pc and other sub-node components. Pc is installed in general management office of this system, the purpose of pc is to bear the general configuration of the multimedia, and it consists of the broadband network interface. Similarly, the sub-node components are inaugurated in the street management office and it is made up of a host computer and number of various guest computers. The guest computers are established in every street lamps control box. This system consists of camera to capture the image of the vehicle and this street light system comprises of infrared sensors to detect the movement of the vehicles. The installation and maintenance of this system is very costly. Many authors suggested many ideas to implement this system. Sentilkumar et al recommended a power saving material to control the street light system using the piezo electric material [2]. Murati et al suggested an idea to develop an automated street light system based on the Piezo and LDR'S sensors [8]. This street light system uses the LED due to its low power consumption and because of its reasonable cost and the benefit of this technique is that the piezo sensors act independently. Electricity is the biggest need in the present days [9]. In this system, electricity is generated by using vibration energy that is generated by movement of the vehicles on the road. There are many sensing systems but Piezo electric sensors are the most reliable for this project. This sensor is also cheapest as compared to other sensors. The author proposed one more idea of developing an energy efficient based IoT smart street system to improve the accuracy, flexibility, safety, maintenance of the system and to overcome the environmental issues. The benefits of the proposed system are the automatic switching of the streetlights and energy saving [3]. India is working on this to improve the condition of streetlights in their homeland. They are replacing the streetlights with the LED lights and to improve the quality of light they are generating power by using the solar panels [10]. Moreover, now a day the existing systems uses the wired networks, which are not flexible and even complex in structure so the solution for these issues is to adopt a wireless networks and IoT. Therefore, for the maintenance and monitoring of the system we use IoT because Internet of things is a combination of both electronic devices and software applications. Akshay Balachandran et al in his paper suggested developing this intelligent streetlights system using piezoelectric sensor networks[11]. This device uses the piezo effects to measure the changes in temperature, acceleration, pressure etc. These piezoelectric network sensors are hidden underneath the road with appropriate sheets. The sensors flow of the vehicle and send the electrical signal to the microcontroller. Microcontroller uses the Arduino and the objective of microcontroller is to change the brightness of the lights accordingly. Warnings are generated to the drivers with the assistance of ZigBee protocol. This system proved to be very efficient for small streets and this intelligent street light system can be used in various areas with heavy traffic for monitoring.

3 System Design and Implementation

Figure 1 shows the block diagram of proposed system empowered by IoT. Arduino is backbone of system that connects all the other components. Piezoelectric sensors are placed over the foot path and connected with a centralized battery. Further the battery is connected with Arduino which connects all the sensors. Lights are connected with battery through Arduino.

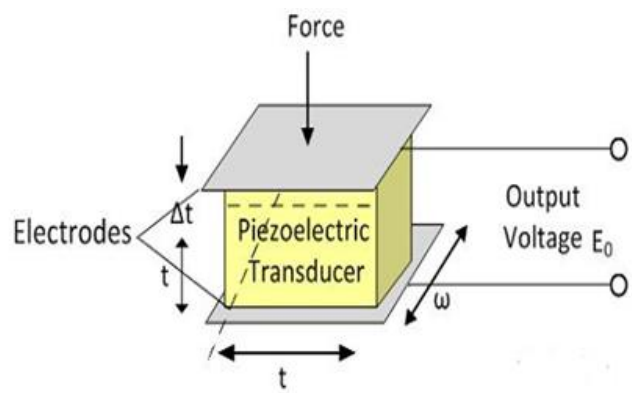

Figure. 1. Block Diagram

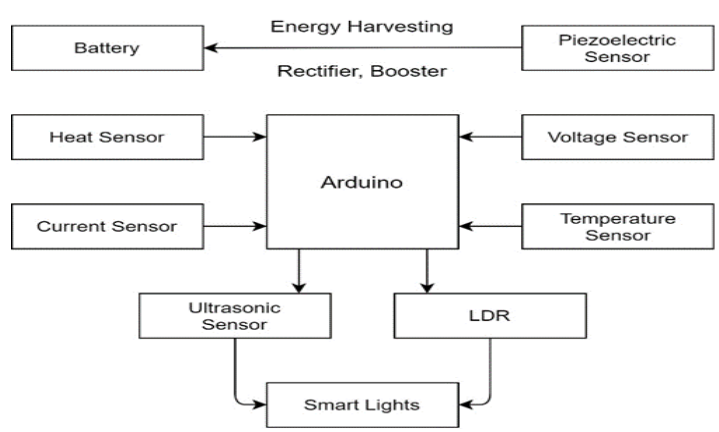

Figure. *2. Arduino UNO Board*

Arduino UNO

Is based on ATmega328 datasheet. It comprises of 14 digital pins consisting of outputs and inputs, a resonator, 6 analog inputs, USB connection, power jack, and ICSP header and a button to reset. It acts as a base for microcontroller and acts very easily when connected to the computer with the USB cable and the battery [12]. When compared to other boards, it has eliminated the use of FTDI USB-to-serial driver chip.

Piezoelectric Sensors

The piezoelectric sensors can be used to measure any alteration in pressure, acceleration, temperature, or force and changes them into electrical impulse [13]. The term piezo refers to “squeezing or pressing”. It works on the piezoelectric effect (ability to convert mechanical stress into electrical impulse). The materials used for sensing the stress are piezoelectric ceramics and single crystal material.

***Figure. 3**. Working of Piezoelectric Sensors*

Light Dependent Resistors

LDR is the abbreviation of light dependent resistors and they are employed to detect the light levels as used in street lights [14]. As the intensity of light increases the resistance decreases hence more current can flow through it. The value of resistor can vary in magnitude depending on the level of light. They are composed of semi-conductor materials which gives them light sensitive properties.

***Figure. 4**. Light Dependent Resistors*

Ultrasonic Sensors

These are the sensors which are used to measure the distance by the use of ultrasonic waves (the waves having frequency above the range of human hearing) [15]. The ultrasonic wave is emitted by the sensor and it reflects back when it strikes the target and is received by sensor. The time of the emitted and reflected wave is measured by the sensor and then distance is calculated.

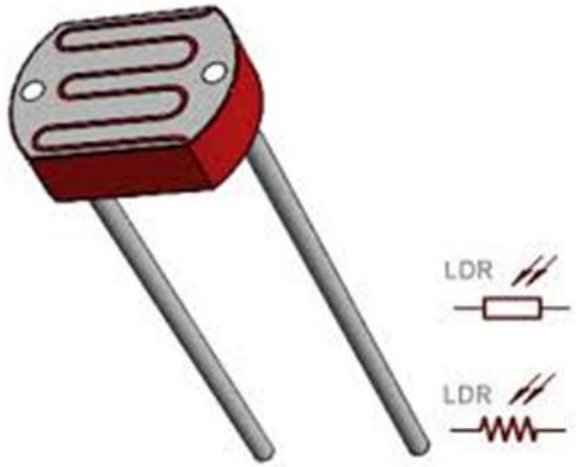

***Figure. 5**. Ultrasonic Sensor*

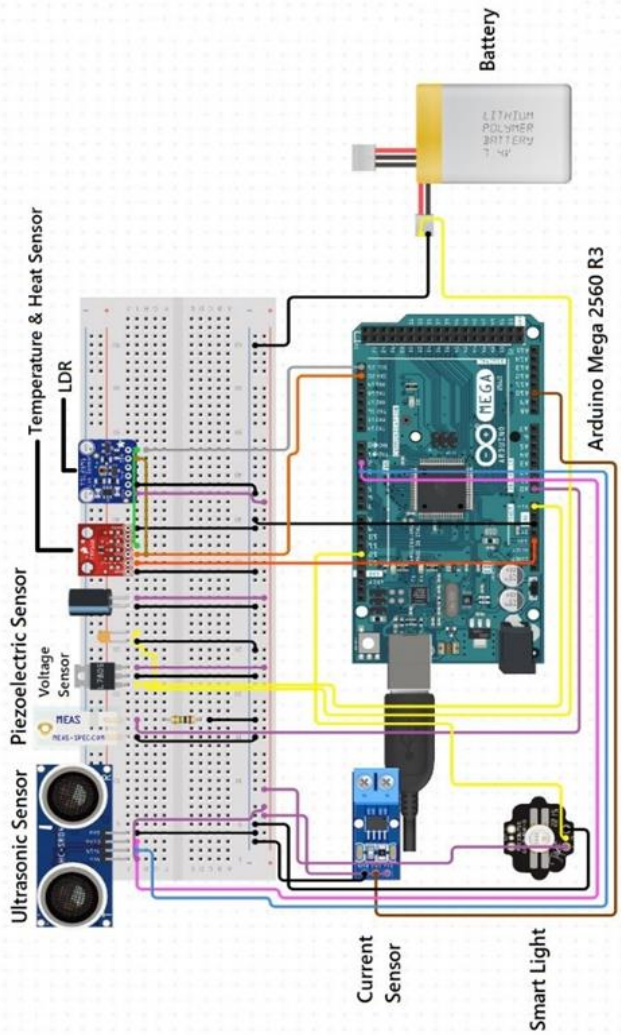

***Figure. 6**. Circuit Diagram*

Figure 6 shows the circuit diagram of system in which all components are attached with central Arduino. Piezoelectric sensors feel the pressure over footpaths and produce the electrical pulses that are stored in external battery. While the ultrasonic sensors are used to sense the object and lights are working according to object sensing.

4 Implementation and Results

Figure 7 shows the electricity production process from piezoelectric sensors. Following equations justifies the electric signals creation upon pressure on piezoelectric sensors. The polarity of output by piezoelectric sensors are based the direction of applied force.

$$Charge\ Q = d * F$$

Where d is the sensitivity and F is applied force over piezoelectric sensors.

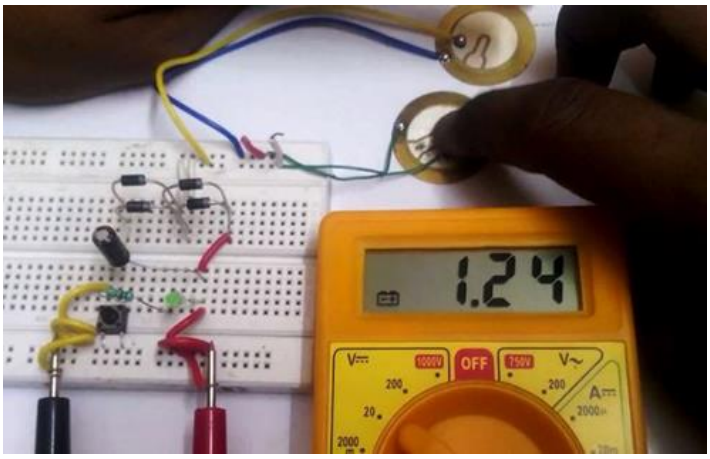

***Figure. 7**. Producing Electricity with Piezoelectric Sensors*

***Figure. 8**. System Implementation-1*

Figure 8 and figure 9 shows the system implementation. In figure 8, the light is turned off because the ultrasonic sensor didn't sense anything. While in figure 9, the pressure is applied on the piezoelectric sensors and the electrical charge is stored in external battery. Then the charge is supplied to light. The prototype is tested on basic level.

***Figure. 9**. System Implementation-2*

5 Conclusion

Street lights are the essential backbone of smart cities. Internet of things presents the idea of automated cities and society 5.0. Various sensors are available to automate the processes of life. Electricity need is increased and the resources are facing the shortage of electricity. We need new mechanism to reduce the electricity cost and new ways to produce the electricity. In this research paper, we have proposed an electricity efficient approach to automate the street lights empowered by piezoelectric sensors. Electricity is produced by piezoelectric sensors and used to operate the street lights via internet of things technologies. In future, we will extend the current system by implementing the video processing techniques to help the street lights operations. Furthermore, the intensity of light will be controlled according to the environmental need.

Acknowledgment

First of all, we would like to thank Mubashir Ali from Lahore Garrison University, Pakistan for providing unconditional support and help in research. We would also like to thank journal editor, area editor and anonymous reviewers for their valuable comments and suggestions to help and improve our research paper.

Conflict of Interest

On behalf of all authors, the corresponding author states that there is no conflict of interest.

REFERENCES

[1] A. Zanella, N. Bui, A. Castellani, L. Vangelista, and M. Zorzi, "Internet of things for smart cities," IEEE Internet Things J., vol. 1, no. 1, pp. 22–32, Feb. 2014, doi: 10.1109/JIOT.2014.2306328.

[2] A. Senthil Kumar, K. Vignesh, M. Sakthivel, K. Priya, and P. Joseph, "A Study on IoT based Smart Street Light Systems," IJERT-International Journal of Engineering Research & Technology, May 2020. Accessed: Dec. 16, 2020. [Online]. Available: www.ijert.org.

[3] P. Arjun, S. Stephenraj, N. Naveen Kumar, and K. Naveen Kumar, "A study on IoT based smart street light systems," Mar. 2019, doi: 10.1109/ICSCAN.2019.8878770.

[4] M. Ali and M. K. Paracha, "An IoT Based Approach for Monitoring Solar Power Consumption with ADAFRUIT Cloud," Int. J. Eng. Appl. Sci. Technol., vol. 4, no. 9, pp. 335–341, 2020, [Online]. Available: https://www.ijeast.com/papers/335-341,Tesma409,IJEAST.pdf.

[5] P. Songsukthawan and C. Jettanasen, "Generation and storage of electrical energy from piezoelectric materials," in 2017 IEEE 3rd International Future Energy Electronics Conference and ECCE Asia, IFEEC - ECCE Asia 2017, Jul. 2017, pp. 2256–2259, doi: 10.1109/IFEEC.2017.7992403.

[6] X. Xu, D. Cao, H. Yang, and M. He, "Application of piezoelectric transducer in energy harvesting in pavement," Int. J. Pavement Res. Technol., vol. 11, no. 4, pp. 388–395, Jul. 2018, doi: 10.1016/j.ijprt.2017.09.011.

[7] M. Goldfarb and L. D. Jones, "On the Efficiency of Electric Power Generation With Piezoelectric Ceramic," J. Dyn. Syst. Meas. Control, vol. 121, no. 3, pp. 566–571, Sep. 1999, doi: 10.1115/1.2802517.

[8] S. Baburajan et al., "Internet of Things Based Intelligent Street Lighting System for Smart City," Int. Res. J. Eng. Technol., vol. 3, no. 2, pp. 7684–7691, 2017, doi: 10.15680/IJIRSET.2016.0505181.

[9] M. Y. Mukta, M. A. Rahman, A. T. Asyhari, and M. Z. Alam Bhuiyan, "IoT for energy efficient green highway lighting systems: Challenges and issues," J. Netw. Comput. Appl., vol. 158, no. February, p. 102575, 2020, doi: 10.1016/j.jnca.2020.102575.

[10] N. M. Kumar, K. Atluri, and S. Palaparthi, "Internet of Things (IoT) in Photovoltaic Systems," 2018 Natl. Power Eng. Conf. NPEC 2018, pp. 1–4, 2018, doi: 10.1109/NPEC.2018.8476807.

[11] Almaw Ayele Aniley, Naveen Kumar S K, and Akshaya Kumar A, "Review Article Soil Moisture Sensors in Agriculture and the possible application of nanomaterials in soil moisture sensors," Ijaert, vol. 6, no. 1, pp. 134–142, 2018, [Online]. Available: www.ijaert.org/wp-content/uploads/2018/01/131469.pdf.

[12] M. Ali, N. Kanwal, A. Hussain, F. Samiullah, A. Iftikhar, and M. Qamar, "IoT Based Smart Garden Monitoring System using NodeMCU Microcontroller," Int. J. Adv. Appl. Sci., vol. 7, no. 8, pp. 117–124, 2020.

[13] J. Wang, Z. Shi, H. Xiang, and G. Song, "Modeling on energy harvesting from a railway system using piezoelectric transducers," Smart Mater. Struct., vol. 24, no. 10, p. 105017, Oct. 2015, doi: 10.1088/0964-1726/24/10/105017.

[14] M. Ali et al., "An IoT based approach for efficient home automation with ThingSpeak," Int. J. Adv. Comput. Sci. Appl., vol. 11, no. 6, pp. 118–124, 2020, doi: 10.14569/IJACSA.2020.0110615.

[15] D. Kapgate, "Wireless Streetlight Control System," Int. J. Comput. Appl., vol. 41, no. 2, pp. 1–7, Mar. 2012, doi: 10.5120/5510-7500.